warringtonfiregent
global safety

MEMBER OF Bodycote TESTING GROUP

FIRE RESISTANCE CLASSIFICATION REPORT N° 13492B

Owner of the classification report:

SOUDAL NV
Everdongenlaan 18-20
B-2300 TURNHOUT

Introduction:

This classification report defines the classification assigned to the linear joint seals named "SOUDAL FIRE RANGE" in accordance with the procedures given in EN 13501-2: 2007: Fire classification of products and building elements – Part 2: Classification using data from fire resistance tests, excluding ventilation services.

This classification report consists of thirteen pages and four annexes and may only be used or reproduced in its entirety.

1 Details of classified product

1.1 General

The elements are defined as linear joint seals named "SOUDAL FIRE RANGE". They are evaluated in respect of their fire performance characteristics given in clause 5 of EN 13501-2: 2007.

1.2 Product description

The elements are fully described in the test report provided in support of this classification report listed in paragraph 2.1. The drawings, legend and technical datasheets of this test report referring to this classification report are enclosed in annexes 1 to 4.

The test specimens are 11 linear joint seals in an aerated concrete wall with a thickness of 200 mm and a density of 550 kg/m³.

Joint seal A:
Joint width: 30 mm.
The joint is filled throughout the full depth of 200 mm with a polyurethane foam type SOUDAFOAM FR [1].

Joint seal B:
Joint width: 25 mm.
At the unexposed side the joint is filled throughout a depth of 25 mm with an intumescent plasto-elastic joint sealant based on acrylic dispersions type FIRECRYL FR [2] and is further fully filled with a polyurethane foam type SOUDAFOAM FR [1].

Joint seal C:
Joint width: 15 mm.
At the unexposed side the joint is filled throughout a depth of 15 mm with a neutral one-component sealant/adhesive based on the SMX-technology type SOUDASEAL FR [3] and is further provided with a compressed backer rod based on extruded polyethylene foam with an initial diameter of 30 mm type PE-BACKER ROD [6].

WFRGENT NV is een spin-off bedrijf van de Universiteit Gent, voorheen Laboratorium voor Aanwending der Brandstoffen en Warmteoverdracht - Afdeling Brandveiligheid
WFRGENT NV is a spin-off company from the University of Gent, previously the Laboratory for Heat Transfer and Fuel Technology - Division Fire Safety
WFRGENT est une compagnie spin-off de l'Université de Gand, autrefois le Laboratoire pour l'Emploi des Combustibles et la Transmission de la Chaleur - Division Sécurité Incendie

Joint seal D:
Joint width: 15 mm.
At the unexposed side the joint is filled throughout a depth of 15 mm with an intumescent plasto-elastic joint sealant based on acrylic dispersions type FIRECRYL FR [2] and is further provided with a compressed backer rod based on extruded polyethylene foam with an initial diameter of 30 mm type PE-BACKER ROD [6].

Joint seal E:
Joint width: 10 mm.
The joint is filled throughout the full depth of 200 mm with polyurethane foam type SOUDAFOAM FR [1].

Joint seal F:
Joint width: 10 mm.
At the unexposed side the joint is filled throughout a depth of 10 mm with a neutral elastic one-component joint sealant based on silicones type SILIRUB FR B1 [4] and is further provided with a compressed backer rod based on extruded polyethylene foam with an initial diameter of 20 mm type PE-BACKER ROD [5].

Joint seal G:
Joint width: 40 mm.
At the unexposed side the joint is filled throughout a depth of 20 mm with a neutral one-component sealant/adhesive based on the SMX-technology type SOUDASEAL FR [3], and is further filled with polyurethane foam type SOUDAFOAM FR [1] and at the exposed side it is filled throughout a depth of 30 mm with an intumescent plasto-elastic joint sealant based on acrylic dispersions type FIRECRYL FR [2].

Joint seal H:
Joint width: 30 mm.
Both on the exposed as on the unexposed side the joint is filled throughout a depth of 20 mm with a neutral one-component sealant/adhesive based on the SMX-technology type SOUDASEAL FR [3] and both sides are further provided with a compressed backer rod based on extruded polyethylene foam with an initial diameter of 40 mm type PE- BACKER ROD [7].

WFRGENT NV is een spin-off bedrijf van de Universiteit Gent, voorheen Laboratorium voor Aanwending der Brandstoffen en Warmteoverdracht - Afdeling Brandveiligheid
WFRGENT NV is a spin-off company from the University of Gent, previously the Laboratory for Heat Transfer and Fuel Technology - Division Fire Safety
WFRGENT est une compagnie spin-off de l'Université de Gand, autrefois le Laboratoire pour l'Emploi des Combustibles et la Transmission de la Chaleur - Division Sécurité Incendie

Joint seal I:
Joint width: 30 mm.
At the unexposed side the joint is filled throughout a depth of 20 mm with a neutral one-component sealant/adhesive based on the SMX-technology type SOUDASEAL FR [3] and is further fully filled with polyurethane foam type SOUDAFOAM FR [1].

Joint seal J:
Joint width: 15 mm.
At the unexposed side the joint is filled throughout a depth of 15 mm with an intumescent plasto-elastic joint sealant based on acrylic dispersions type FIRECRYL FR [2] and is further fully filled with polyurethane foam type SOUDAFOAM FR [1].

Joint seal K:
Joint width: 25 mm.
At the unexposed side the joint is filled throughout a depth of 20 mm with a neutral one-component sealant/adhesive based on the SMX-technology type SOUDASEAL FR [3] and is further fully filled with polyurethane foam type SOUDAFOAM FR [1].

All the products of the backer rod systems have been applied in one single layer, with the exception of the Firecryl FR [2] which had been applied in layers with a maximum thickness of 15 mm, each time with a time interval of minimum 1 day.

The joints with their seals A to I are vertically installed and joints J and K are horizontally installed in the wall.

WFRGENT NV is een spin-off bedrijf van de Universiteit Gent, voorheen Laboratorium voor Aanwending der Brandstoffen en Warmteoverdracht - Afdeling Brandveiligheid
WFRGENT NV is a spin-off company from the University of Gent, previously the Laboratory for Heat Transfer and Fuel Technology - Division Fire Safety
WFRGENT est une compagnie spin-off de l'Université de Gand, autrefois le Laboratoire pour l'Emploi des Combustibles et la Transmission de la Chaleur - Division Sécurité Incendie

2 Reports and test results in support of this classification

2.1 Reports

Name of the laboratory	Identification number report	Owner of the report	Date of the test	Test method
WFRGENT N.V.	13492A	SOUDAL N.V.	25/11/2008	EN 1366-4:2006

Exposure conditions during the fire resistance test:

Temperature/time curve: standard as in EN 1363-1: 1999.
Direction of exposure: The joint seals are exposed to the fire on one side. Joint seals A, E and H are symmetric, joint seals B, C, D, F, G, I, J and K are asymmetric. The direction in which their sides are exposed is shown in paragraph 1.2.
The joint seals are installed in an aerated concrete wall. Joint seals A until I are vertically placed, joint seals J and K are horizontally placed.
No load was applied.
The joint seals are not subjected to mechanically induced movement prior to or during the fire resistance test.

WFRGENT NV is een spin-off bedrijf van de Universiteit Gent, voorheen Laboratorium voor Aanwending der Brandstoffen en Warmteoverdracht - Afdeling Brandveiligheid
WFRGENT NV is a spin-off company from the University of Gent, previously the Laboratory for Heat Transfer and Fuel Technology - Division Fire Safety
WFRGENT est une compagnie spin-off de l'Université de Gand, autrefois le Laboratoire pour l'Emploi des Combustibles et la Transmission de la Chaleur - Division Sécurité Incendie

Test results

	Parameters		
	Thermal insulation	**Integrity**	
	$\Delta T_M = 180°C$	Ignition cotton pad	Spontaneous and sustained flaming
Test specimen failed after	results		
Joint seal A	158 minutes	162 minutes	(1)
Joint seal B	(2)	(2)	(2)
Joint seal C	(2)	(2)	(2)
Joint seal D	(2)	(2)	(2)
Joint seal E	(2)	(2)	(2)
Joint seal F	(2)	(2)	(2)
Joint seal G	(2)	(2)	(2)
Joint seal H	(2)	(2)	(2)
Joint seal I	(2)	(2)	(2)
Joint seal J	(2)	(2)	(2)
Joint seal K	(2)	(2)	(2)

(1) Because the test specimen was covered after 163 minutes in order not to influence the other test specimens and to allow continuation of the test, this criterion could no longer be judged after 163 minutes.

(2) No failure at the end of the test.
The test duration was 240 minutes.

3 Classification and field of application

3.1 Reference of classification

This classification has been carried out in accordance with paragraph 7.5.9 of EN 13501-2: 2007.

3.2 Classification

The elements are classified according to the following combinations of performance parameters and classes as appropriate.

WFRGENT NV is een spin-off bedrijf van de Universiteit Gent, voorheen Laboratorium voor Aanwending der Brandstoffen en Warmteoverdracht - Afdeling Brandveiligheid
WFRGENT NV is a spin-off company from the University of Gent, previously the Laboratory for Heat Transfer and Fuel Technology - Division Fire Safety
WFRGENT est une compagnie spin-off de l'Université de Gand, autrefois le Laboratoire pour l'Emploi des Combustibles et la Transmission de la Chaleur - Division Sécurité Incendie

Joint seal A:

Joint width: 30 mm.

The joint is filled throughout the full depth of 200 mm with a polyurethane foam type SOUDAFOAM FR [1].

The classifications are approved for exposure to fire on both sides of the joint seal.

EI 120 - V - X – W 00 to 30,	**E 120 - V - X – W 00 to 30,**
EI 90 - V - X – W 00 to 30,	E 90 - V - X – W 00 to 30,
EI 60 - V - X – W 00 to 30,	E 60 - V - X – W 00 to 30,
EI 45 - V - X – W 00 to 30,	E 45 - V - X – W 00 to 30,
EI 30 - V - X – W 00 to 30,	E 30 - V - X – W 00 to 30,
EI 20 - V - X – W 00 to 30,	E 15 - V - X – W 00 to 30.
EI 15 - V - X – W 00 to 30.	

Joint seal B:

Joint width: 25 mm.

At the unexposed side the joint is filled throughout a depth of 25 mm with an intumescent plasto-elastic joint sealant based on acrylic dispersions type FIRECRYL FR [2] and is further fully filled with polyurethane foam type SOUDAFOAM FR [1].

The classifications are only approved for exposure to fire on the side with the SOUDAFOAM FR [1].

EI 240 - V - X – W 00 to 25,	**E 240 - V - X – W 00 to 25,**
EI 180 - V - X – W 00 to 25,	E 180 - V - X – W 00 to 25,
EI 120 - V - X – W 00 to 25,	E 120 - V - X – W 00 to 25,
EI 90 - V - X – W 00 to 25,	E 90 - V - X – W 00 to 25,
EI 60 - V - X – W 00 to 25,	E 60 - V - X – W 00 to 25,
EI 45 - V - X – W 00 to 25,	E 45 - V - X – W 00 to 25,
EI 30 - V - X – W 00 to 25,	E 30 - V - X – W 00 to 25,
EI 20 - V - X – W 00 to 25,	E 15 - V - X – W 00 to 25.
EI 15 - V - X – W 00 to 25.	

WFRGENT NV is een spin-off bedrijf van de Universiteit Gent, voorheen Laboratorium voor Aanwending der Brandstoffen en Warmteoverdracht - Afdeling Brandveiligheid
WFRGENT NV is a spin-off company from the University of Gent, previously the Laboratory for Heat Transfer and Fuel Technology - Division Fire Safety
WFRGENT est une compagnie spin-off de l'Université de Gand, autrefois le Laboratoire pour l'Emploi des Combustibles et la Transmission de la Chaleur - Division Sécurité Incendie

Joint seal C:

Joint width: 15 mm.

At the unexposed side the joint is filled throughout a depth of 15 mm with a neutral one-component sealant/adhesive based on the SMX-technology type SOUDASEAL FR [3] and is further provided with a compressed backer rod based on extruded polyethylene foam with an initial diameter of 30 mm type PE-BACKER ROD [6].

The classifications are only approved for exposure to fire on the side with the PE-BACKER ROD [6].

EI 240 - V - X – W 00 to 15,	**E 240 - V - X – W 00 to 15,**
EI 180 - V - X – W 00 to 15,	E 180 - V - X – W 00 to 15,
EI 120 - V - X – W 00 to 15,	E 120 - V - X – W 00 to 15,
EI 90 - V - X – W 00 to 15,	E 90 - V - X – W 00 to 15,
EI 60 - V - X – W 00 to 15,	E 60 - V - X – W 00 to 15,
EI 45 - V - X – W 00 to 15,	E 45 - V - X – W 00 to 15,
EI 30 - V - X – W 00 to 15,	E 30 - V - X – W 00 to 15,
EI 20 - V - X – W 00 to 15,	E 15 - V - X – W 00 to 15.
EI 15 - V - X – W 00 to 15.	

Joint seal D:

Joint width: 15 mm.

At the unexposed side the joint is filled throughout a depth of 15 mm with an intumescent plasto-elastic joint sealant based on acrylic dispersions type FIRECRYL FR [2] and is further provided with a compressed backer rod based on extruded polyethylene foam with an initial diameter of 30 mm type PE-BACKER ROD [6].

The classifications are only approved for exposure to fire on the side with the PE-BACKER ROD [6].

EI 240 - V - X – W 00 to 15,	**E 240 - V - X – W 00 to 15,**
EI 180 - V - X – W 00 to 15,	E 180 - V - X – W 00 to 15,
EI 120 - V - X – W 00 to 15,	E 120 - V - X – W 00 to 15,
EI 90 - V - X – W 00 to 15,	E 90 - V - X – W 00 to 15,
EI 60 - V - X – W 00 to 15,	E 60 - V - X – W 00 to 15,
EI 45 - V - X – W 00 to 15,	E 45 - V - X – W 00 to 15,
EI 30 - V - X – W 00 to 15,	E 30 - V - X – W 00 to 15,
EI 20 - V - X – W 00 to 15,	E 15 - V - X – W 00 to 15.
EI 15 - V - X – W 00 to 15.	

WFRGENT NV is een spin-off bedrijf van de Universiteit Gent, voorheen Laboratorium voor Aanwending der Brandstoffen en Warmteoverdracht - Afdeling Brandveiligheid
WFRGENT NV is a spin-off company from the University of Gent, previously the Laboratory for Heat Transfer and Fuel Technology - Division Fire Safety
WFRGENT est une compagnie spin-off de l'Université de Gand, autrefois le Laboratoire pour l'Emploi des Combustibles et la Transmission de la Chaleur - Division Sécurité Incendie

Joint seal E:

Joint width: 10 mm.

The joint is filled throughout the full depth of 200 mm with a polyurethane foam type SOUDAFOAM FR [1].

The classifications are approved for exposure to fire on both sides of the joint seal.

EI 240 - V - X – W 00 to 10,	**E 240 - V - X – W 00 to 10,**
EI 180 - V - X – W 00 to 10,	E 180 - V - X – W 00 to 10,
EI 120 - V - X – W 00 to 10,	E 120 - V - X – W 00 to 10,
EI 90 - V - X – W 00 to 10,	E 90 - V - X – W 00 to 10,
EI 60 - V - X – W 00 to 10,	E 60 - V - X – W 00 to 10,
EI 45 - V - X – W 00 to 10,	E 45 - V - X – W 00 to 10,
EI 30 - V - X – W 00 to 10,	E 30 - V - X – W 00 to 10,
EI 20 - V - X – W 00 to 10,	E 15 - V - X – W 00 to 10.
EI 15 - V - X – W 00 to 10.	

Joint seal F:

Joint width: 10 mm.

At the unexposed side the joint is filled throughout a depth of 10 mm with a neutral elastic one-component sealant/adhesive based on silicones type SILIRUB FR B1 [4] and is further provided with a compressed backer rod based on extruded polyethylene foam with an initial diameter of 20 mm type PE-BACKER ROD [5].

The classifications are only approved for exposure to fire on the side with the PE-BACKER ROD [5].

EI 240 - V - X – W 00 to 10,	**E 240 - V - X – W 00 to 10,**
EI 180 - V - X – W 00 to 10,	E 180 - V - X – W 00 to 10,
EI 120 - V - X – W 00 to 10,	E 120 - V - X – W 00 to 10,
EI 90 - V - X – W 00 to 10,	E 90 - V - X – W 00 to 10,
EI 60 - V - X – W 00 to 10,	E 60 - V - X – W 00 to 10,
EI 45 - V - X – W 00 to 10,	E 45 - V - X – W 00 to 10,
EI 30 - V - X – W 00 to 10,	E 30 - V - X – W 00 to 10,
EI 20 - V - X – W 00 to 10,	E 15 - V - X – W 00 to 10.
EI 15 - V - X – W 00 to 10.	

WFRGENT NV is een spin-off bedrijf van de Universiteit Gent, voorheen Laboratorium voor Aanwending der Brandstoffen en Warmteoverdracht - Afdeling Brandveiligheid
WFRGENT NV is a spin-off company from the University of Gent, previously the Laboratory for Heat Transfer and Fuel Technology - Division Fire Safety
WFRGENT est une compagnie spin-off de l'Université de Gand, autrefois le Laboratoire pour l'Emploi des Combustibles et la Transmission de la Chaleur - Division Sécurité Incendie

Joint seal G:

Joint width: 40 mm.

At the unexposed side the joint is filled throughout a depth of 20 mm with a neutral one-component sealant/adhesive based on the SMX-technology type SOUDASEAL FR [3], is further filled with polyurethane foam type SOUDAFOAM FR [1] and on the exposed side it is filled throughout a depth of 30 mm with an intumescent plasto-elastic joint sealant based on acrylic dispersions type FIRECRYL FR [2].

The classifications are only approved for exposure to fire on the side with the FIRECRYL FR [2].

EI 240 - V - X – W 00 to 40,	**E 240 - V - X – W 00 to 40,**
EI 180 - V - X – W 00 to 40,	E 180 - V - X – W 00 to 40,
EI 120 - V - X – W 00 to 40,	E 120 - V - X – W 00 to 40,
EI 90 - V - X – W 00 to 40,	E 90 - V - X – W 00 to 40,
EI 60 - V - X – W 00 to 40,	E 60 - V - X – W 00 to 40,
EI 45 - V - X – W 00 to 40,	E 45 - V - X – W 00 to 40,
EI 30 - V - X – W 00 to 40,	E 30 - V - X – W 00 to 40,
EI 20 - V - X – W 00 to 40,	E 15 - V - X – W 00 to 40.
EI 15 - V - X – W 00 to 40.	

WFRGENT NV is een spin-off bedrijf van de Universiteit Gent, voorheen Laboratorium voor Aanwending der Brandstoffen en Warmteoverdracht - Afdeling Brandveiligheid
WFRGENT NV is a spin-off company from the University of Gent, previously the Laboratory for Heat Transfer and Fuel Technology - Division Fire Safety
WFRGENT est une compagnie spin-off de l'Université de Gand, autrefois le Laboratoire pour l'Emploi des Combustibles et la Transmission de la Chaleur - Division Sécurité Incendie

Joint seal H:
Joint width: 30 mm.
Both on the exposed as on the unexposed side the joint is filled throughout a depth of 20 mm with a neutral one-component sealant/adhesive based on the SMX technology type SOUDASEAL FR [3] and both sides are further provided with a compressed backer rod based on extruded polyethylene foam with an initial diameter of 40 mm type PE-BACKER ROD [7].
The classifications are approved for exposure to fire on both sides of the joint seal.

EI 240 - V - X – W 00 to 30,	**E 240 - V - X – W 00 to 30,**
EI 180 - V - X – W 00 to 30,	E 180 - V - X – W 00 to 30,
EI 120 - V - X – W 00 to 30,	E 120 - V - X – W 00 to 30,
EI 90 - V - X – W 00 to 30,	E 90 - V - X – W 00 to 30,
EI 60 - V - X – W 00 to 30,	E 60 - V - X – W 00 to 30,
EI 45 - V - X – W 00 to 30,	E 45 - V - X – W 00 to 30,
EI 30 - V - X – W 00 to 30,	E 30 - V - X – W 00 to 30,
EI 20 - V - X – W 00 to 30,	E 15 - V - X – W 00 to 30.
EI 15 - V - X – W 00 to 30.	

Joint seal I:
Joint width: 30 mm.
At the unexposed side the joint is filled throughout a depth of 20 mm with a neutral one-component sealant/adhesive based on the SMX technology type SOUDASEAL FR [3] and is further fully filled with polyurethane foam type SOUDAFOAM FR [1].
The classifications are only approved for exposure to fire on the side with the SOUDAFOAM FR [1].

EI 240 - V - X – W 00 to 30,	**E 240 - V - X – W 00 to 30,**
EI 180 - V - X – W 00 to 30,	E 180 - V - X – W 00 to 30,
EI 120 - V - X – W 00 to 30,	E 120 - V - X – W 00 to 30,
EI 90 - V - X – W 00 to 30,	E 90 - V - X – W 00 to 30,
EI 60 - V - X – W 00 to 30,	E 60 - V - X – W 00 to 30,
EI 45 - V - X – W 00 to 30,	E 45 - V - X – W 00 to 30,
EI 30 - V - X – W 00 to 30,	E 30 - V - X – W 00 to 30,
EI 20 - V - X – W 00 to 30,	E 15 - V - X – W 00 to 30.
EI 15 - V - X – W 00 to 30.	

WFRGENT NV is een spin-off bedrijf van de Universiteit Gent, voorheen Laboratorium voor Aanwending der Brandstoffen en Warmteoverdracht - Afdeling Brandveiligheid
WFRGENT NV is a spin-off company from the University of Gent, previously the Laboratory for Heat Transfer and Fuel Technology - Division Fire Safety
WFRGENT est une compagnie spin-off de l'Université de Gand, autrefois le Laboratoire pour l'Emploi des Combustibles et la Transmission de la Chaleur - Division Sécurité Incendie

Joint seal J:

Joint width: 15 mm.

At the unexposed side the joint is filled throughout a depth of 15 mm with an intumescent plasto-elastic joint sealant based on acrylic dispersions type FIRECRYL FR [2] and is further fully filled with polyurethane foam type SOUDAFOAM FR [1].

The classifications are only approved for exposure to fire on the side with the SOUDAFOAM FR [1].

EI 240 - T - X – W 00 to 15,	**E 240 - T - X – W 00 to 15,**
EI 180 - T - X – W 00 to 15,	E 180 - T - X – W 00 to 15,
EI 120 - T - X – W 00 to 15,	E 120 - T - X – W 00 to 15,
EI 90 - T - X – W 00 to 15,	E 90 - T - X – W 00 to 15,
EI 60 - T - X – W 00 to 15,	E 60 - T - X – W 00 to 15,
EI 45 - T - X – W 00 to 15,	E 45 - T - X – W 00 to 15,
EI 30 - T - X – W 00 to 15,	E 30 - T - X – W 00 to 15,
EI 20 - T - X – W 00 to 15,	E 15 - T - X – W 00 to 15.
EI 15 - T - X – W 00 to 15.	

Joint seal K:

Joint width: 25 mm.

At the unexposed side the joint is filled throughout a depth of 20 mm with a neutral one-component sealant/adhesive based on the SMX technology type SOUDASEAL FR [3] and is further fully filled with polyurethane foam type SOUDAFOAM FR [1].

The classifications are only approved for exposure to fire on the side with the SOUDAFOAM FR [1].

EI 240 - T - X – W 00 to 25,	**E 240 - T - X – W 00 to 25,**
EI 180 - T - X – W 00 to 25,	E 180 - T - X – W 00 to 25,
EI 120 - T - X – W 00 to 25,	E 120 - T - X – W 00 to 25,
EI 90 - T - X – W 00 to 25,	E 90 - T - X – W 00 to 25,
EI 60 - T - X – W 00 to 25,	E 60 - T - X – W 00 to 25,
EI 45 - T - X – W 00 to 25,	E 45 - T - X – W 00 to 25,
EI 30 - T - X – W 00 to 25,	E 30 - T - X – W 00 to 25,
EI 20 - T - X – W 00 to 25,	E 15 - T - X – W 00 to 25.
EI 15 - T - X – W 00 to 25.	

WFRGENT NV is een spin-off bedrijf van de Universiteit Gent, voorheen Laboratorium voor Aanwending der Brandstoffen en Warmteoverdracht - Afdeling Brandveiligheid
WFRGENT NV is a spin-off company from the University of Gent, previously the Laboratory for Heat Transfer and Fuel Technology - Division Fire Safety
WFRGENT est une compagnie spin-off de l'Université de Gand, autrefois le Laboratoire pour l'Emploi des Combustibles et la Transmission de la Chaleur - Division Sécurité Incendie

warringtonfiregent
global safety

3.3 Field of direct application

The joint seals, tested in an aerated concrete wall with a thickness of 200 mm and a density of 550 kg/m³, may also be applied in walls of concrete, blockwork and masonry with a thickness and a density equal to or greater than the one tested.

4 Duration of the validity of the classification report

At the time the standard EN 13501-2: 2007 was published, no decision was made concerning the duration of validity of the classification document.

5 Warning

This classification report does not hold type approval or product certification.

The classification attributed to the product mentioned in this report is subordinate to a declaration of conformity by the notified body, within the context of a system 1 of declaration of conformity and CE marking under the construction products directive, considering the sampling was performed by a notified body.

Report	Name	Signature*	Date
Prepared by	P. TACK		26 JAN 2009
Reviewed by	Prof. dr. ir. P. VANDEVELDE		26 JAN 2009
* For and on behalf of WFRGENT N.V.			

EN 13501-2 FSG REC 017 -version 1

This document is a translation into English of the classification report Nr. 13492B, originally issued in Dutch. This translated classification report has been issued under the responsibility of and checked by WFRGENT N.V. This translation is issued according to the "Interpretations of the European standard EN ISO/IEC 17025: 2005" which applies to fire test laboratories, as defined in the EGOLF agreement EA 08:2008.
In case of doubt, the original version in Dutch prevails.

This report may be used only literally and completely for publications. - For publications of certain texts, in which this report is mentioned, our permission must be obtained in advance.

Front view - unexposed side

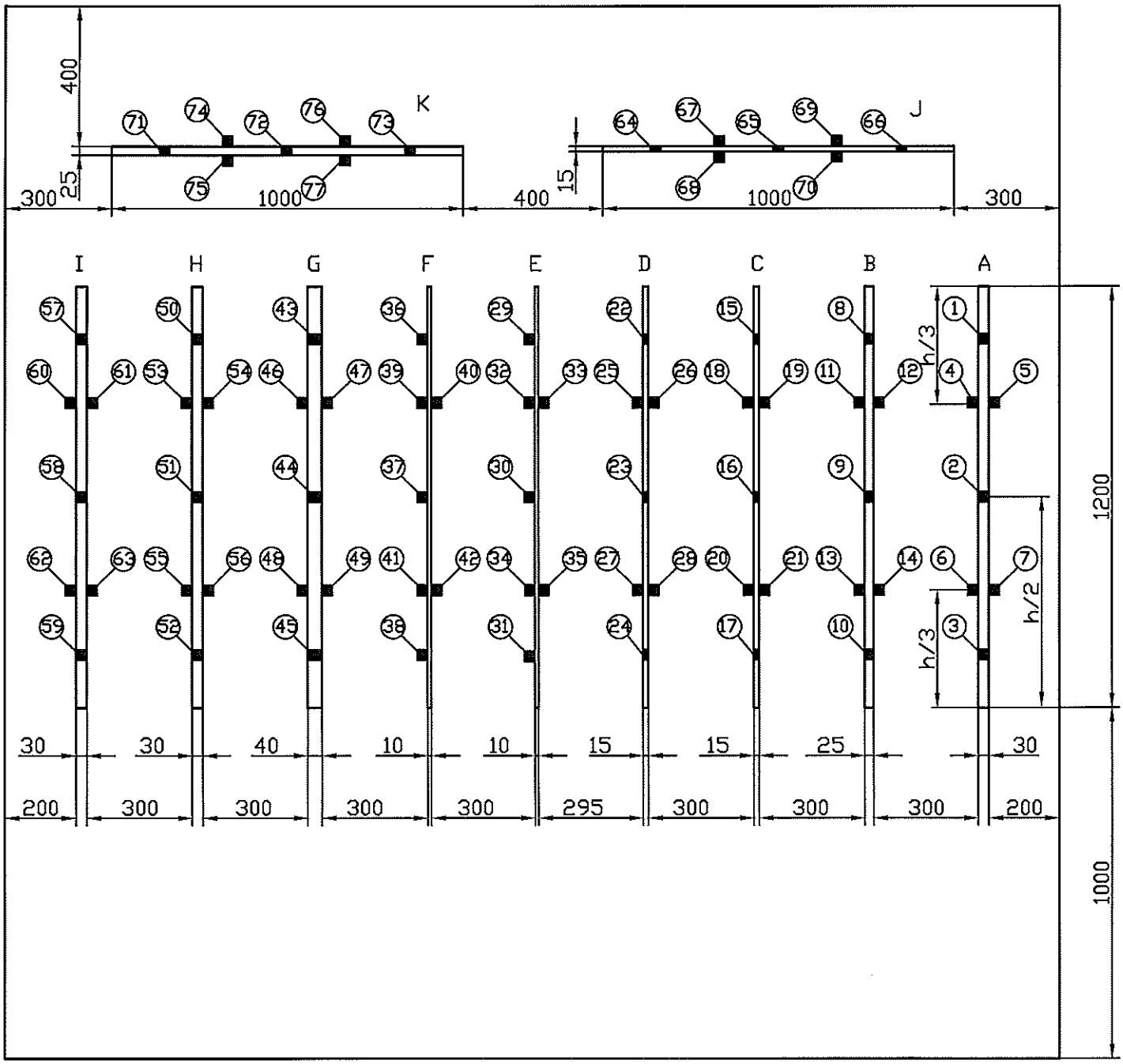

■ = Position of the thermocouples on the unexposed side

warringtonfiregent
global safety
WFRGENT nv
Ottergemsesteenweg-Zuid 711
B-9000 GENT • BELGIUM

A

30 mm x 200 mm

Soudafoam FR

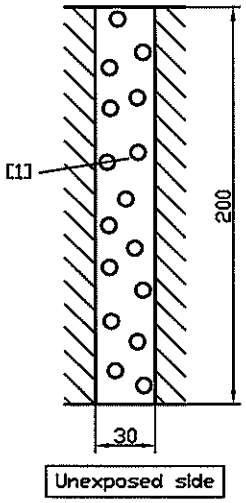

B

25 mm x 200 mm

25 mm Firecryl FR

+ Soudafoam FR

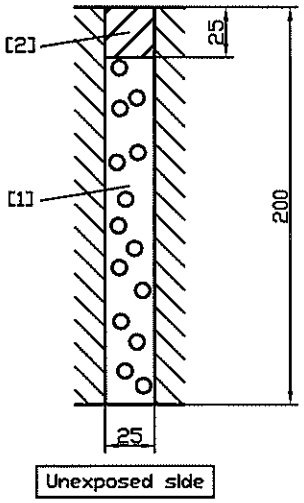

C

15 mm x 200 mm

15 mm Soudaseal FR

+ back filling PE

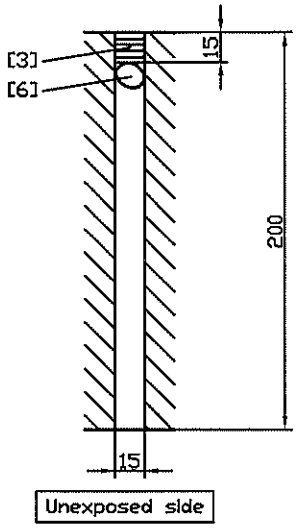

D

15 mm x 200 mm

15 mm Firecryl FR

+ back filling PE

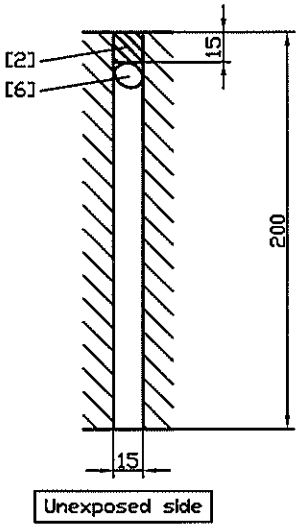

E

10 mm x 200 mm

Soudafoam FR

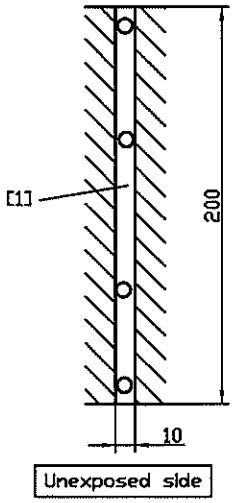

F

10 mm x 200 mm

10 mm Silirub FR B1

+ back filling PE

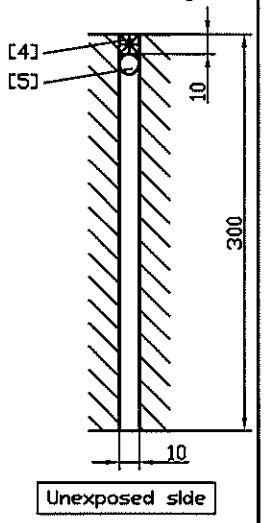

G

40 mm x 200 mm

20 mm Soudaseal FR

+ Soudafoam FR

+ 30 mm Firecryl FR

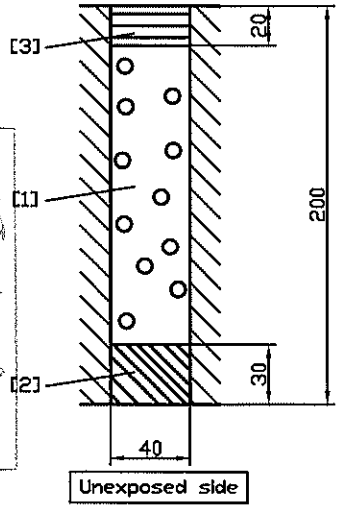

H

2 x 20 mm Soudaseal FR

+ 2 x + back filling PE

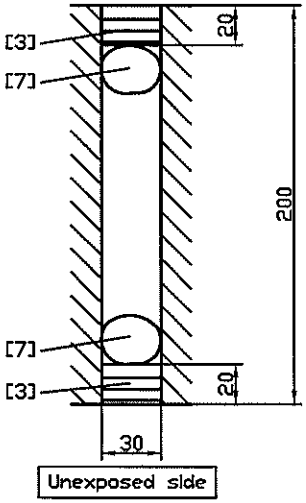

I

30 mm x 200 mm

20 mm Soudaseal FR

+ Soudafoam FR

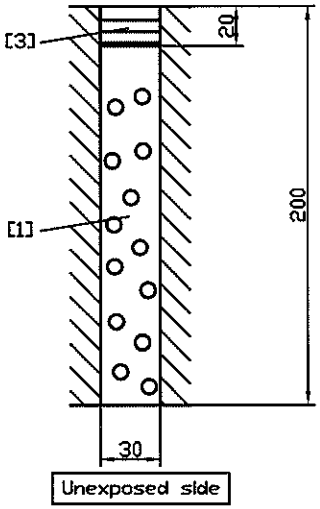

J

15 mm x 200 mm

15 mm Firecryl FR

+ Soudafoam FR

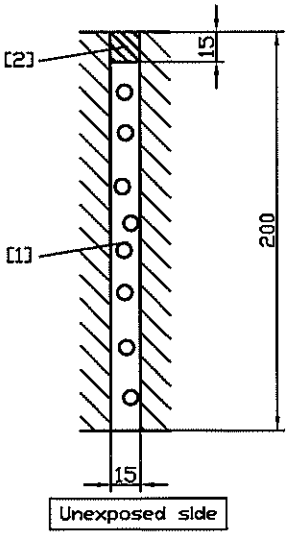

K

20 mm x 200 mm

20 mm Soudaseal FR

+ Soudafoam FR

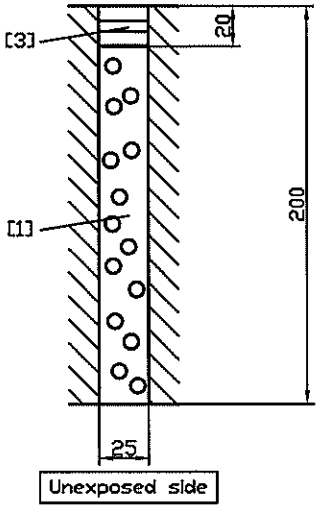

warnington regent
WARGENT nv
Oltenemsesteenweg-Zuid 211
B-9000 GENT - BELGIUM

LEGEND

[1] SOUDAFOAM FR – brand: SOUDAL – one-component self expanding, ready to use polyurethane foam *.

[2] FIRECRYL FR – brand: SOUDAL – fire retardant, intumescent plasto-elastic sealant based on acrylic dispersions *.

[3] SOUDASEAL FR – brand: SOUDAL – high-quality, neutral, one-component sealant/adhesive based on the SMX-technology *.

[4] SILIRUB FR B1 – brand: SOUDAL – high-quality, neutral and elastic one-component sealant based on silicones *.

[5] PE–BACKER ROD – brand: SOUDAL – round profile in extruded closed cell polyethylene foam * – initial diameter: 20 mm.

[6] PE– BACKER ROD – brand: SOUDAL – round profile in extruded closed cell polyethylene foam * – initial diameter: 30 mm.

[7] PE– BACKER ROD – brand: SOUDAL – round profile in extruded closed cell polyethylene foam * – initial diameter: 40 mm.

* Information provided to the laboratory by the sponsor.

SOUDAL

Technical Data Sheet

SOUDAFOAM FR

Date:22/01/09

Technical Data:

Base	Polyurethane
Consistency	Stable Foam, thixothropic
Curing System	Moisture cure polymerization
Skin Formation (20°C/65% R.H.)	8 minutes
Drying time (20°C/65% R.H.)	Tackfree after 20-25 min.
Curing Rate (20°C/65% R.H.)	2h for a 30mm bead at 2 0°C
Yield	1000mL yields 35-40L of foam
Shrink	None
Postexpansion	None
Cellular Structure	ca. 70 to 80 % closed cells
Specific Gravity	Ca. 25kg/m³
Temperature Resistance	-40°C until +90°C (when cured)
colour	light red

Product:
Soudafoam FR is a single-component, self-expanding, ready to use polyurethane foam. It has a fire rating of up to 240 minutes according to the European norm CE 1366-4. The foam only contains propellants which are completely harmless to the ozone layer..

Characteristics:
- Fire retardant up to 120 minutes for a joint of 3cm.
- Seal against smoke and gas
- Excellent adhesion on most substrates (exept Teflon, PE and PP)
- High thermal and accoustical insulation values
- Excellent mounting characteristics

Applications:
Installation of fire doors and fire windows.
Fire- and smoke retardant sealant between walls, ceilings and floors
Sealings of all openings in roof constructions
Creation of a sound-proof screen

Packaging:
Packaging: aerosol can 750mL

Shelflife:

9 months in unopened packaging in a cool and dry storage place at temperatures between +5°C and +25°.

Surfaces:
Type: all substrates except PE, PP
State of Surface: clean, free of dust and grease
Preparation: no primer required. Moisten surfaces for improved adhesion, faster curing and denser cellular structure

Application:
Method: Shake can well during 20 seconds. Screw the adaptor on the to can. Moisten the surface which needs to be clean and free of grease.
For non classic surfaces we recommend a preliminary adhesion test. Fill the joint or cavitiy for 65% as the foam will continue to expand during the curing.
Shake can regularly during the use. Indien several layers are applied, moisten surface of each layer. Uncured foam may be removed with Cleaner or Acetone. Cured foam may only be removed mechanically.
Application temperature: +5°C to +30°C

Remark: The directives contained in this documentation are the result of our experiments and of our experience and have been submitted in good faith. Because of the diversity of the materials and substrates and the great number of possible applications which are out of our control, we cannot accept any responsability for the results obtained. In every case it is recommended to carry out preliminary experiments.

Soudal NV
Tel.: +32 (0)14-42.42.31
Everdongenlaan 18-20
Fax: +32 (0)14-42.65.14
2300 Turnhout, Belgium
www.soudal.com

warringtonfiregent
WFRGENT nv
Ottergemsesteenweg-Zuid 711
B-9000 GENT • BELGIUM

SOUDAL

Technical Data Sheet

SOUDAFOAM FR

Date:22/01/09

Health- and Safety Recommendation:
Apply the usual industrial hygiene.
Wear gloves and safety goggles.
Remove cured foam by mechnical means only,
never burn away.
Consult the label for more information.

warringtonfiregent
WFRGENT nv
Ottergemsesteenweg-Zuid 711
B-9000 GENT • BELGIUM

Remark: The directives contained in this documentation are the result of our experiments and of our experience and have been submitted in good faith. Because of the diversity of the materials and substrates and the great number of possible applications which are out of our control, we cannot accept any responsability for the results obtained. In every case it is recommended to carry out preliminary experiments.

Soudal NV Everdongenlaan 18-20 2300 Turnhout, Belgium
Tel.: +32 (0)14-42.42.31 Fax: +32 (0)14-42.65.14 www.soudal.com

SOUDAL

Technical Data Sheet

FIRECRYL FR

Technical Data:

Base	Acrylic Dispersion
Consistency	Pasta
Skin formation (20°C/65% R.H.)	Approx. 20 min. (20°C , 65% r.h.)
Shrinkage (DIN 52451)	Approx. 15%
Specific Gravity (DIN 53479B)	Approx. 1,40 g/ml
Temperature Resistance	-20°C to +80°C
Maximum allowed Distortion	10%

* These values may vary according to ambient conditions such as temperature, humidity, and type of substrate

Product:
Firecryl is a fire retardant intumescent plasto-elastic joint sealant based on acrylic dispersions.

Characteristics:
- Prevents the passage of fire and smoke
- Fire rating up to 4 hours with PE backer rod (EN 1366 Part 4)
- Slightly intumescent in contact with fire
- Foams up above 120°C
- Permanently elastic and paintable
- Colourfast and waterproof after curing
- Excellent adhesion on all porous surfacess
- Paintable after curing

Applications:
- fire-resistant interior applications
- Filling of cracks and tears in concrete and plasterwork
- Fire-resistant connection joints
- Fire-resistant expansion joints (up to 10% movement max.)

Packaging:
Colour: white, grey
Packaging: cartridge 310 ml, foilbag 600 ml

Shelflife:
At least 12 months in unopened packaging in a cool and dry storage place at temperatures between +5°C and +25°C. Protect against frost!

Surfaces:
Type: all porous building surfaces. Not suitable for natural stone, bitumen, glass and metal.
State of Surface: The substrates to be sealed must be clean, dry, free of dust and of grease
Preparation: Moisten very porous surfaces such as plaster board, cellular concrete etc. slightly and then pretreat with diluted Firecryl FR (1 part Firecryl FR dissolved in 2 parts water)
We recommend a preliminary compatibility test on every surface.

Joint Size:
Minimum Width: 5mm
Maximum Width: 20mm
Recommendation: joint depth = joint width

Use PE backer rods before application of the sealant in joints with large dimensions to avoid three-sided adhesion

Applying the sealant:
Application method: Apply the sealant in the joint by means of a handheld or pneumatic caulking gun. Tool the sealant with e.g. a spatula.
Application temperature: +5°C to +30°C, do not apply when rain or frost are imminent
Clean: Uncured Firecryl may be removed with water from tools and materials. Cured sealant must be removed mechanically.
Repair: with Firecryl
Tool: with soapy solution

warringtonfiregent
global safety
WFRGENT nv
Ottergemsesteenweg-Zuid 711
B-9000 GENT • BELGIUM

Remark: The directives contained in this documentation are the result of our experiments and of our experience and have been submitted in good faith. Because of the diversity of the materials and substrates and the great number of possible applications which are out of our control, we cannot accept any responsability for the results obtained. In every case it is recommended to carry out preliminary experiments.

SOUDAL

Technical Data Sheet

FIRECRYL FR

Remarks:

- Do not use in applications where continuous water immersion is possible.
- Can be painted over with most paints.
- The paint should be sufficiently elastic to be applied on a plasto-elastic sealant.
- Due to the large variety of available types of paint, a preliminary compatibility test is recommended.

Health- and safety recommendations:
Apply the usual industrial hygiene.
Consult the label for more information.

warringtonfiregent
global safety
WFRGENT nv
Ottergemsesteenweg-Zuid 711
B-9000 GENT • BELGIUM

Remark: The directives contained in this documentation are the result of our experiments and of our experience and have been submitted in good faith. Because of the diversity of the materials and substrates and the great number of possible applications which are out of our control, we cannot accept any responsability for the results obtained. In every case it is recommended to carry out preliminary experiments.

SOUDAL

Technical Data Sheet

SOUDASEAL FR

Revision: 22/01/2009

Technical Characteristics:

Base	SMX-technology ™
Consistency	Stable Paste
Curing System	Moisture cure polymerization
Skin Formation (*) (20°C/50% R.V.)	Approx. 10 min.
Curing Rate (*) (20°C/50% R.V.)	2 mm/24h
Hardness (DIN 53505)	20 ± 5 Shore A
Specific Gravity (DIN 53479)	1,57 g/ml
Elastic recovery (ISO 7389)	> 70 %
Maximum Deformation	± 25 %
Temperature Resistance	-40°C to +90°C
Elasticity Modulus 100 % (DIN 53504)	0,33 N/mm²
Tear Strength (DIN 53504)	0,82 N/mm²
Elongation at break (DIN 53504)	430 %

(*) these values may vary depending on environmental factors such as temperature, moisture, and type of substrates

Product:
Soudaseal FR is a high quality, neutral, single component joint and adhesive sealant based on SMX technology which cures to an elastic product by moisture cure polymerisation. For use in applications where a joint sealant is required with good fire retardant characteristics .

Characteristics:
- Very good adhesion on almost all substrates
- Very good mechanical characteristics
- High elasticity, maximum allowed distortion +/-25%
- Easty to apply and extrude even in adverse conditions
- Excellent resistance against UV radiation and all weather influences
- Ecological advantages – free of isocyanates, solvents, acids and halogenes
- Can pe painted with water based systems

Applications:
Fire rated Expansion and connection joints in the building industry
Sealing of fire retardant joints in prefabricated buildings and in high rise constructions
Flexible bonding in automotive applications

Packaging:
Colour: white, grey
Packaging: cartridge 290 ml; foil bag 600 ml (other packaging on request)

Shelflife:
12 months in unopened packaging in a cool and dry storage place at temperatures between +5°C and +25°C.

Resistance to chemicals:
Good resistance to water, aliphatic solvents, diluted inorganic acids and alkalis, mineral oils, grease
Poor resistance to aromatic solvents, concentrated acids, chlorinated hydrogens

Substrates:
Types: all usual building substrates, pretreated wood, PVC, plastics ...
Nature: clean, dry, free of dust and grease
Preparation: Porous surfaces which are exposed to high water pressure must be prepared with Primer 150. Surface Activator may be used on non-porous surfaces.
We recommend preliminary compatibility tests on each substrate.

Remark: The directives contained in this documentation are the result of our experiments and of our experience and have been submitted in good faith. Because of the diversity of the materials and substrates and the great number of possible applications which are out of our control, we cannot accept any responsability for the results obtained. In every case it is recommended to carry out preliminary experiments.

Soudal NV
Tel.: +32 (0)14-42.42.31
Everdongenlaan 18-20
Fax: +32 (0)14-42.65.14
2300 Turnhout, Belgium
www.soudal.com

warringtonfiregent
WFRGENT nv
Ottergemsesteenweg-Zuid 711
B-9000 GENT • BELGIUM

SOUDAL

Technical Data Sheet

SOUDASEAL FR

Joint dimensions:
Minimal width: 2mm for bonding applications
5 mm for joints
Maximal width: 10mm for bonding applications
30 mm for joints
Minimum depth: 5 mm for joints
Recommendation: 2 x depth of joint = width of joint

Application:
Method: Manual- or pneumatic caulking gun
Application temperature: +5°C until +30°C
Cleaning: White Spirit or Surface Cleaner immediately after application..
Tooling: soapy solution or Soudal Tooling Liquid before skin formation
Repair with: the same material

Health- and Safety Recommendation:
Apply the usual industrial hygiene.
Consult the label for additional information

Remarks:
Soudaseal FR may be painted, however due to the large number of paints and varnishes available we recommend a compatibility test before application. The drying time of alkyd resin based paints may increase.
Soudaseal FR may not be used as glazing sealant.

warringtonfiregent
WFRGENT nv
Ottergemsesteenweg-Zuid 711
B-9000 GENT • BELGIUM

Remark: The directives contained in this documentation are the result of our experiments and of our experience and have been submitted in good faith. Because of the diversity of the materials and substrates and the great number of possible applications which are out of our control, we cannot accept any responsability for the results obtained. In every case it is recommended to carry out preliminary experiments.

Soudal NV
Tel.: +32 (0)14-42.42.31
Everdongenlaan 18-20
Fax: +32 (0)14-42.65.14
2300 Turnhout, Belgium
www.soudal.com

SOUDAL

Technical Data Sheet

Silirub FR B1

Date:22/01/09

Technical Data:

Base	Polysiloxane
Consistency	Stable Paste
Curing System	Moisture cure polymerization
Skin Forming (20°C/65% R.H.)	Ca 20 min.
Curing Rate	1mm/24h
Shore A Hardness	16 Shore A
Specific Gravity	Ca 1,17g/ml
Temperature Resistance	-40°C until +140°C
Elastical Recovery (DIN 52455)	>90%
Maximum Deformation	25%
E-Modulus 100% (DIN53504)	0,20N/mm²
Elongation at Break (DIN53504)	900%

Product:

Silirub FR B1 is a high quality, neutral, elastic, single component joint sealant based on silicones which conforms to the DIN4102 B1 standard for fire retardancy. It has a fire rating of up to 4 hours in certain joint configurations (EN 1366 Part 4 – NBN 713.020 – BS 476/20).

Characteristics:
- Very easy to apply
- Colourfast and UV-stable
- Remains permanently elastic after full cure
- Very good adhesion on many materials
- Low modulus
- Very high fire retardancy
- Class B1 (DIN 4102-Part 2)
- Up to 4 hours fire rating with normal PE backing material (see table)
- Can not be painted

Applications:
All usual building and glazing joints.
Expansion joints which require a high fire retardancy

Packaging:
Colour: grey, white
Packaging: cartridge 310mL, foil bag 600mL

Shelflife:

9 months in unopened packaging in a cool and dry storage place at temperatures between +5°C and +25°.

Joint Dimensions:
Minimum Width: 5mm
Maximum Width: 30mm
Joint configuration: width = 2x depth

Surfaces:
Type: all usual porous and non-porous building materials
State of Surface: clean, dry, free of dust and of grease
Preparation: porous substrates must always be primed with Soudal Primer 150. Soudal Surface Activator will improve the adhesion on smooth surfaces.

Application method:
Method: caulking gun
Backing material: PE backer rods for correct joint dimension
Application temperature: +1°C to +30°C
Clean: with white spirit
Repair: with Silirub FR B1
Finish: with soapy solution

Remark: The directives contained in this documentation are the result of our experiments and of our experience and have been submitted in good faith. Because of the diversity of the materials and substrates and the great number of possible applications which are out of our control, we cannot accept any responsability for the results obtained. In every case it is recommended to carry out preliminary experiments.

Soudal NV
Tel.: +32 (0)14-42.42.31
Everdongenlaan 18-20
Fax: +32 (0)14-42.65.14
2300 Turnhout, Belgium
www.soudal.com

warringtonfiregent
WFRGENT nv
Ottergemsesteenweg-Zuid 711
B-9000 GENT • BELGIUM

SOUDAL

Technical Data Sheet

Silirub FR B1

Health- and Safety Recommendation:
Apply the usual industrial hygiene.
Consult the label for more information.

warringtonfiregent
WFRGENT nv
Ottergemsesteenweg-Zuid 711
B-9000 GENT • BELGIUM

Remark: The directives contained in this documentation are the result of our experiments and of our experience and have been submitted in good faith. Because of the diversity of the materials and substrates and the great number of possible applications which are out of our control, we cannot accept any responsability for the results obtained. In every case it is recommended to carry out preliminary experiments.